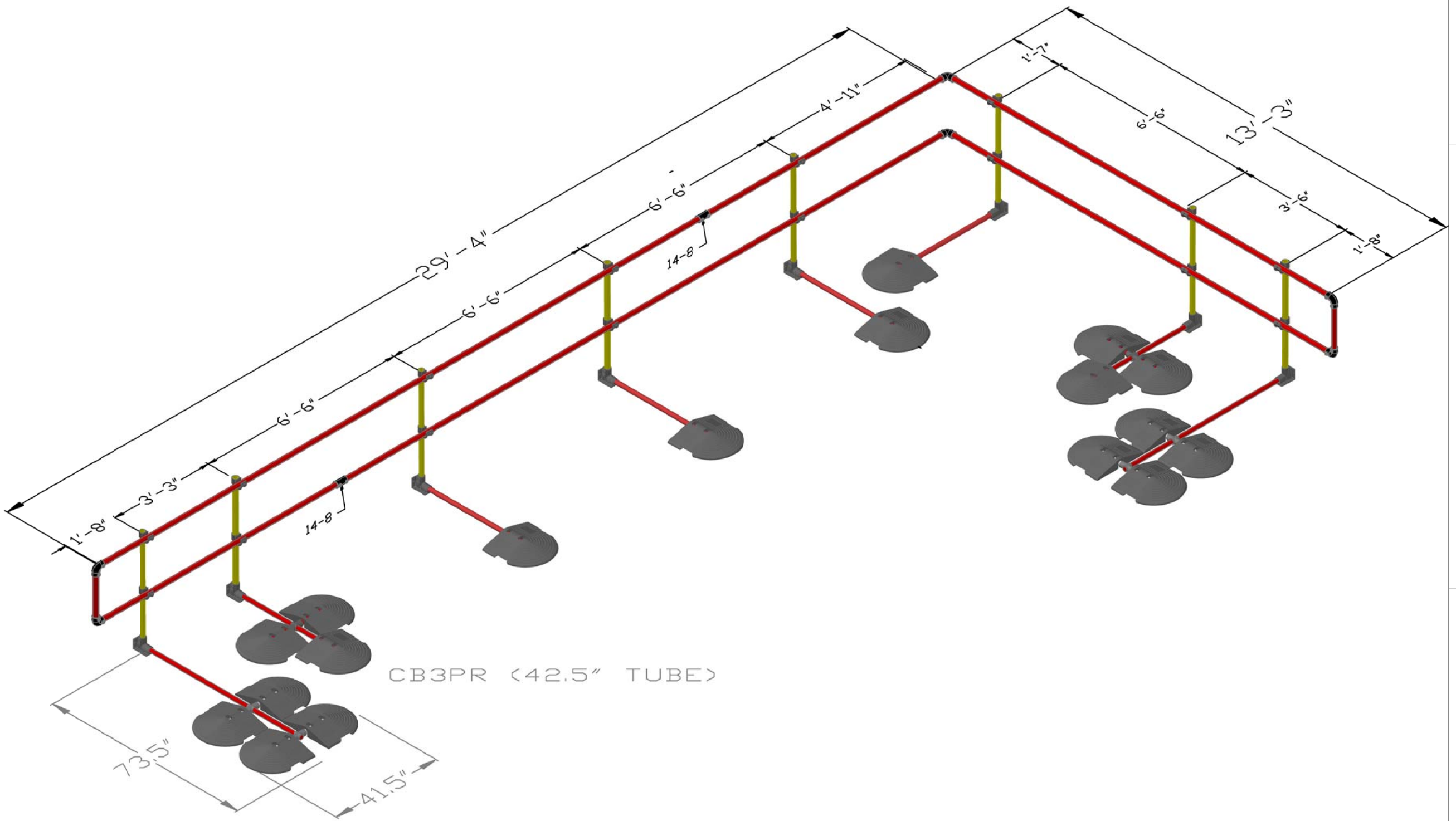

DRAWING SUPPLIED TO SAFETY RAIL SOURCE BY KEE SAFETY INC., BUFFALO NY

Installation Instructions:

1. Be sure the locations for all uprights and counterbalances are free from stones and loose debris. Kee Safety advises that Kee Guard should not be installed during snowy or icy weather unless all snow and ice is cleared first.

2. Position a KGU (KEE GUARD Upright). Angle of uprights are adjustable between 90° and 79° from the horizontal. Connect a CB4 PVC counterbalance assembly to the KGU with the 66" long 1-1/4" pipe and tighten the set screws to 29 lbs/ft (39 Nm).

3. Position a KGU at 3'-3" from the first upright and connect a CB3 PVC assembly with the 42" long 1-1/4" pipe and tighten the set screws to 29 lbs/ft (39 Nm).

4. Position a KGU at 6'-6" from the previous upright and connect a CB1 PVC assembly with the 42" long 1-1/4" pipe and tighten the set screws to 29 lbs/ft (39 Nm).

5. Set the Schedule 40 1-1/2" galvanized pipe into the KEE KLAMP Type 135-8 at the top and at the mid section of the uprights to form two rails and tighten the set screws. Connect the lengths of handrail together using Kee Klamp Type 14-8 (Straight Coupling) and tighten the set screws to 29 lbs/ft (39 Nm). Be sure to stagger the joints of the horizontal rails. Ideally the Type 14-8 (Straight Coupling) connections on the mid rail and top rail should be offset by 6'-6".

6. Continue along the roof edge repeating steps 4 & 5.

7. At 90° corners, use Kee Klamp Type 15-8 (90° Elbow). Ensure that an upright is located less than 20" from the corner. The total length between uprights around the corner must be no greater than 6'-6".

Corners:

At corners greater than or less than 90° where a run is continuous, use KEE KLAMP Type BC53-88 (Swivel Elbow). Be sure the spacing is no greater than 6'-6" between the uprights, with one upright being no further than 20" from the corner.

Termination:

The beginning and end of every continuous run must have a KGU with a CB4 PVC assembly and a KGU with a CB3 PVC assembly 3'-3" from the CB4 PVC assembly unless fastened to a structural member.

To fasten the KEE GUARD rail into brickwork use two KEE KLAMP Type 61-8 (Wall Flange). The closest upright should be placed no further than 6'-6" from the wall.

To blank off the open ends of pipe, create a D-Return of no greater than 20" using two KEE KLAMP Type 15-8 (90° Elbow).
Alternative Method: use two Type 133D (Plastic Plug). Note: If using Type 133D to blank off the ends of the horizontal rails, the plugged ends of the horizontal rails must be flush with the terminating end upright.

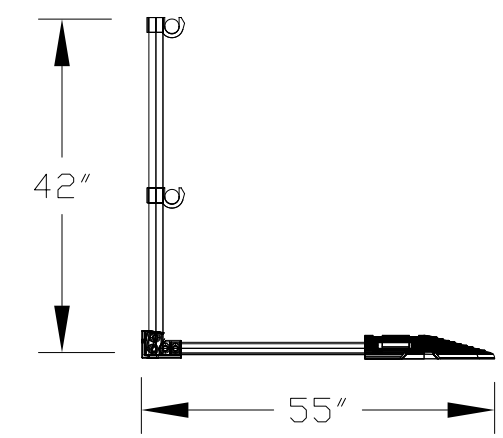

Kee® Safety

BILL OF MATERIAL

ASSEMBLY DESIGNATION	QTY.	PIECE DESCRIPTION
KGU135	8	Main Upright Assembly with Kee Klamp fitting to attach counterbalance system
CB1 PVC	4	Main Counterbalance Assembly - Plastic
CB3 PVC	2	Triple Free End Counterbalance Assembly - Plastic
CB4 PVC	2	4 Piece Free End Counterbalance Assembly - Plastic
14-8	0	Kee Klamp pipe connector 1-1/2"
15-8	2	Kee Klamp 90° elbow for corner 1-1/2"
D-RETURNS	2	D-return
HANDRAIL	5	Lengths of 1-1/2" schedule 40 galvanized pipe 21'-0" long
BC53-88	0	Kee Klamp Swivel Elbow 1-1/2"

GENERAL NOTES

1. THE PURPOSE OF THIS DRAWING IS TO DEFINE CORRECT ASSEMBLIES AND COMPONENTS OF KEEGUARD.

2. THE BILL OF MATERIAL IS THE TOTAL QUANTITIES OF KEEGUARD ASSEMBLIES REQUIRED FOR INSTALLATION.

3. INSTALLER MUST NOT DEVIATE FROM THE DIMENSIONAL LAYOUT OF KEEGUARD AS DEFINED BY THIS DRAWING.

4. SUBSTITUTION OF KEEGAURD ASSEMBLIES WITH OTHER MATERIALS OR COMPONENTS VOIDS ANY GUARANTEE, IMPLIED OR OTHERWISE. SUBSTITUTION OF KEEGUARD ASSEMBLIES WITH OTHER MATERIALS MAY CREATE HAZARDS, RISK OF INJURY OR PRODUCT FAILURE.

5. KEEGUARD ROOF EDGE PROTECTION SYSTEM IS NOT TO BE USED AS AN ANCHOR FOR FALL ARREST SYSTEMS.

6. ALL SET SCREWS MUST BE TIGHTENED TO A TORQUE OF 29 FT. LBS.

7. WHERE THE KEEGUARD ROOF EDGE PROTECTION SYSTEM ENDS AND ATTACHES TO EXISTING BUILDING CONSTRUCTION WITH A WALL FLANGE (61-8), ATTACHMENT METHOD IS THE RESPONSIBILITY OF THE INSTALLER AND MUST COMPLY WITH ALL BUILDING CODES AND STANDARDS.

8. DRAWING IS BASED ON THE INFORMATION PROVIDED TO KEE SAFETY. WE ARE NOT RESPONSIBLE FOR FIELD CONDITIONS THAT ARE DIFFERENT FROM THE INFORMATON PROVIDED TO US.

DOCUMENT IS THE PROPERTY OF KEE SAFETY INC. AND IS TO BE USED ONLY FOR THE PURPOSE IT WAS LENT. DOCUMENT CANNOT BE REPRODUCED WITHOUT WRITTEN PERMISSION FROM KEE SAFETY. ANY DEVIATION IN PRODUCT INSTALLATION OR COMPONENTS FROM THE INFORMATION PROVIDED IN THIS DOCUMENT NEGATES ALL ENGINEERED VALUE. DOCUMENT IS SUBJECT TO RETRUN UPON REQUEST.

REV.	DATE	DESCRIPTION
0	11-25-08	ORIGINAL ISSUE

REVISION & SUBMITTAL RECORD

the safety rail source

SAFETY RAIL SOURCE
2570 BLVD. OF THE GENERALS, NORRISTOWN PA 19403
PHONE: 877-723-3766 FAX: 610-539-1630
WEBSITE WWW.SAFETYRAILSOURCE.COM

KEEGUARD ROOF EDGE PROTECTION SYSTEM
SYSTEM INSTALLATION DRAWING

29'-4" x 13'-3" CORNER

DWN. BY: DMS
CHK'D BY:
SCALE: NONE
REV.: 0
DWG. No.: DWG. #